Overview

- Level limit detection in liquids, slurries, foam, interfaces and solids
- Compact unit
- Wide range of applications
- No maintenance
- Full-, demand-, empty detector
- Extended pipe version or cable version
- High chemical resistance on probes
- Capacitive technology
- Level detection independent of tank wall/ pipe
- Sensitivity: dielectric constant ≥1.5

Standard electronics with:
- Universal power supply
- Solid-state switch and Relay output

Digital electronics with:
- Communication via PROFIBUS PA
- Integrated Local User Interface
- Self diagnostics

- Multiple approvals available
- 2011/65/EU RoHS conform

Approvals	CE		
	ATEX/ INMETRO/ CCC	Zone 0	Intrinsically Safe
		Zone 0/1	Flameproof
		Zone 2	Type of protection n/ ec
		Zone 20/21	Dust Ignition Proof or Intrinsically Safe
	FM/ CSA	General purp.	
		Cl. I Div. 1	Intrinsically Safe
		Cl. I Div. 1	Explosionproof
		Cl. I Div. 2	Non incendive
		Cl. II, III Div. 1	Dust Ignition Proof
	Lloyd's Register	Categories ENV1, ENV2, ENV3 and ENV5	
	WHG/ VLAREM	Overfill protection	

		Electronic module Standard	Electronic module Digital
Electronics	Supply voltage	12 .. 250 V AC/ DC (0 .. 60 Hz)	12 .. 30 V DC (24 V for IS version)
	Signal output	Relais SPDT Solid-state switch (30 V DC or AC peak, 82 mA)	Profibus PA Solid-state switch (30 V DC or AC peak, 82 mA)
	Signal output delay	Rise time or Fall time 1 .. 60 sec.	Rise time 0 .. 100 sec. Fall time 0 .. 100 sec.
	Failsafe	High or Low	High or Low
	User interface	Potentiometer, switches, 3 LED indicator	LCD local user interface or Profibus PA
	Diagnostics	-	Over and Under Range Electronics temperature Function check Maintenance alarm Internal electronic self check

Housing	Material of housing	Aluminium, powder-coated
	Ingress protection	Type 4/ NEMA 4/ IP68 [1]
	Material of Temperature extended shaft	1.4404 (SS316L), option
	Ambient temperature	-40 .. 85°C (-40 .. 185°F) With Ex-Certificate ATEX, INMETRO, CCC: -40 .. 80°C (-40 .. 176°F) with Flameproof or Dust Ignition Proof or Type of protection n/ ec -40 .. 60°C (-40 .. 140°F) with Intrinsically safe

[1] For version with plug the type of protection can be lower (see pos.35).

Overview

Mechanics and Process	Length of extension "L"	Short extension threaded Short extension flanged/ Triclamp Pipe extension Cable extension	120 .. 5,500 mm (4.72 .. 216.5") 98 .. 5,500 mm (3.86 .. 216.5") 210 .. 5,500 mm (8.27 .. 216.5") 500 .. 30,000 mm (19.69 .. 1,181")
	Diameter of pipe/ cable extension	Pipe extension Cable	ø20 mm (ø0.79") ø6 mm (ø0.3")
	Materials	Process connection Pipe extension Cable insulation Probe (sensor) Wetted seals	1.4404 (SS316L) 1.4404 (SS316L) FEP PPS or PVDF, FDA and 1935/2004/EC conform FKM or FFKM
	Process temperature	Without temp. extended shaft With temp. extended shaft	-40 .. 85°C (-40 .. 185°F) -40 .. 125°C (-40 .. 257°F)
	Process pressure*	Pipe version Cable/ sliding coupling	-1 .. 25 bar g (-14.6 .. 365 psi g) nominal -1 .. 10 bar g (-14.6 .. 150 psi g) nominal *Observe Pressure versus Temperature Curves
	Tensile load (cable version)	max. 1,750 N	

Cable entries (by default)
Depending on model selected, the following cable entries are supported (options see pos.33):

Version:	Cable entries:
Flameproof (pos.2 T,L,5)	M20 x 1.5 (1x open conduit + 1x blind plug)
FM/FMc (pos.2 M,H,U,P,N	NPT ½" tapered ANSI B1.20.1 (1x open conduit + 1x blind plug)
All other versions	M20 x 1.5 (1x screwed cable gland + 1x blind plug)

CN 8100

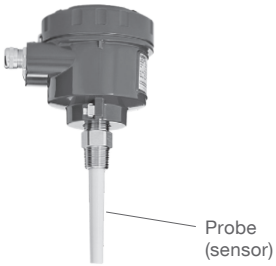

Short extension length
(pos.5/6 0A and 8 A)

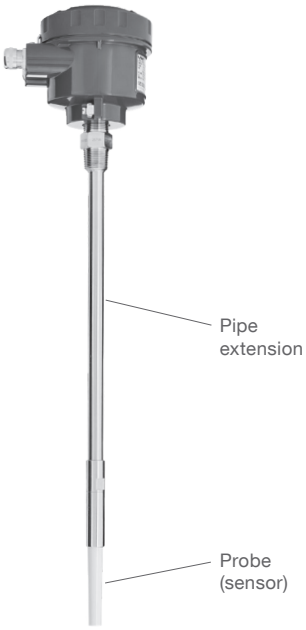

Pipe version
Extended
(pos.5/6 0A and 8 B-Y)

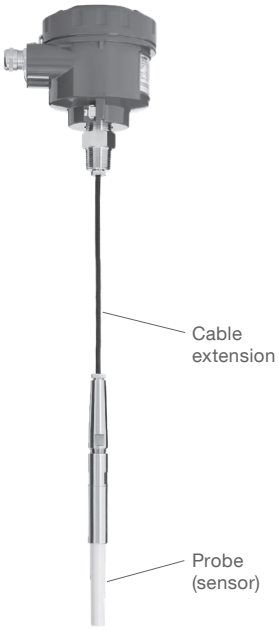

Cable version
(pos.5/6 0A and 8 Z)

Remote version

Options

Plug

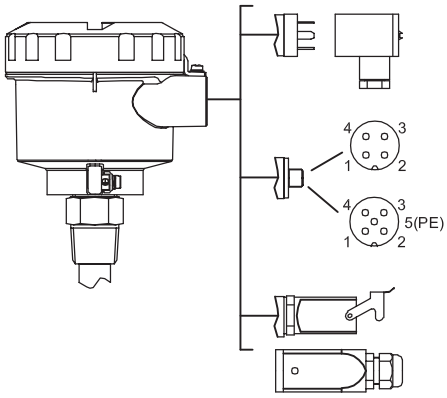

pos.35 x
Valve connector
max. 230 V
Enclosure plastic
Protection IP65
-40 °C <= T_a <= +125 °C

pos.35 a,b
Plug M12
max. 25 V (4-pole), 60 V (5-pole)
Enclosure brass
Protection IP66
-25 °C <= T_a <= +80 °C

pos.35 c
Plug Han 4A
max. 230 V
Enclosure zinc
Protection IP65
-40 °C <= T_a <= +125 °C

Connection of the plug wires to the internal terminals of the unit refer to documentation "Plugs and Signal lamps - Connecting diagram".

Signal lamp

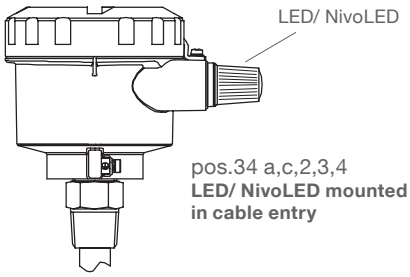

pos.34 a,c,2,3,4
LED/ NivoLED mounted in cable entry

Connection of the wires to the internal terminals of the unit refer to documentation "Plugs and Signal lamps - Connecting diagram".

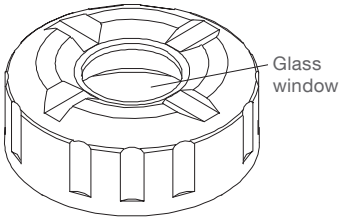

pos.36 x
Glass window in lid

Dimensions

Enclosure

Top view

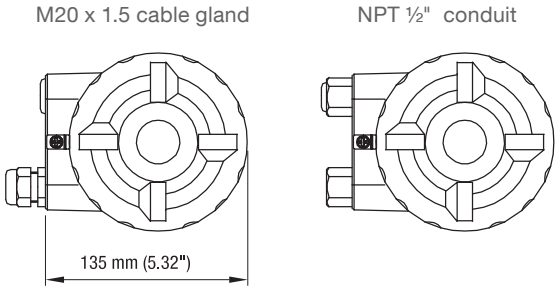

Threaded process connection

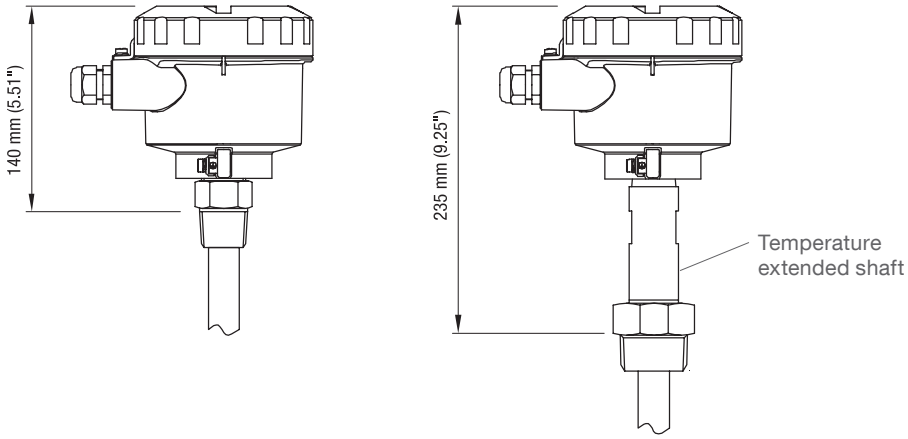

Flanged process connection

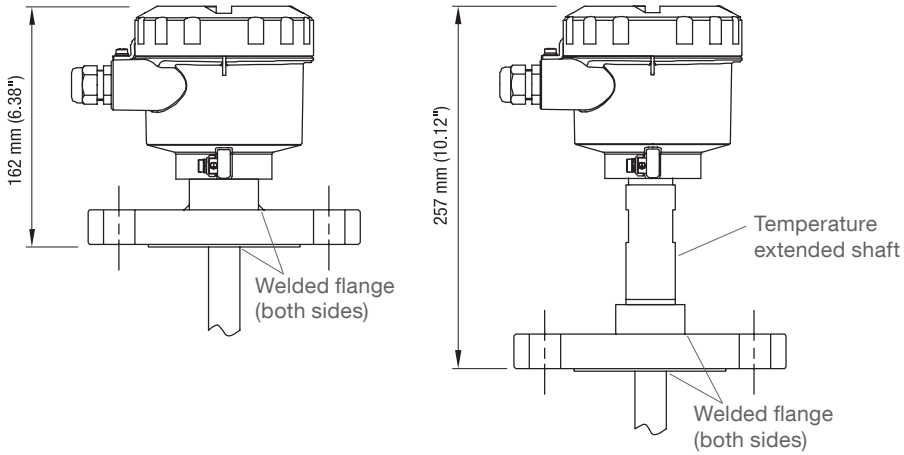

Triclamp process connection

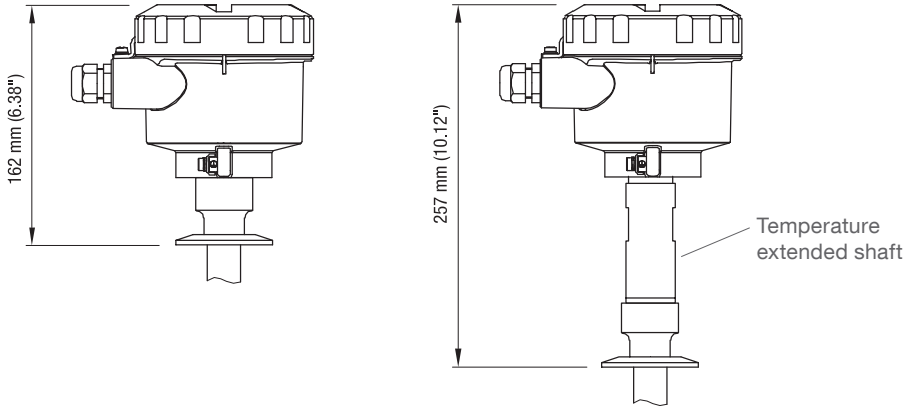

Dimensions

Short extension length
Shortest lenght

Threaded process connection

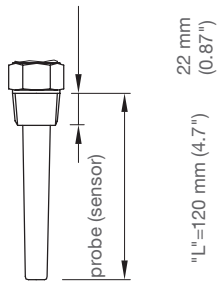

Flanged process connection

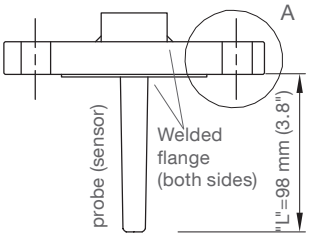

Triclamp process connection

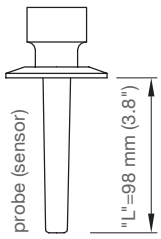

Pipe version
Extended

Threaded process connection

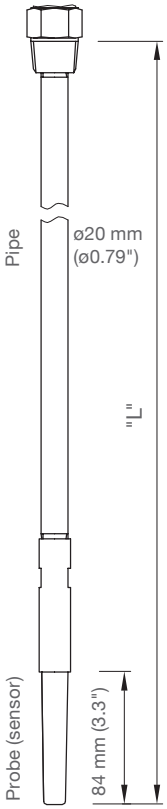

Flanged process connection

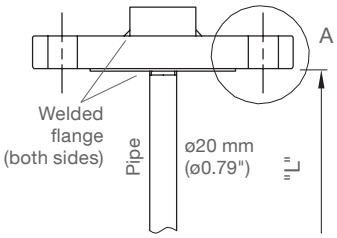

Triclamp process connection

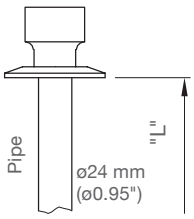

Pipe version
Extended,
with sliding
coupling (pos.19)

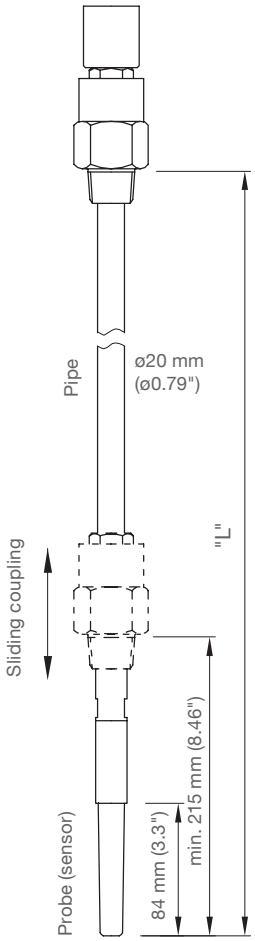

Detail "A"

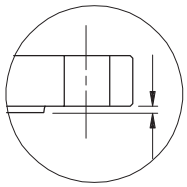

"L" does not include any raised face

Cable version

Threaded process connection

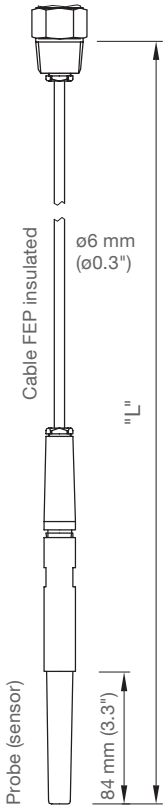

Flanged process connection

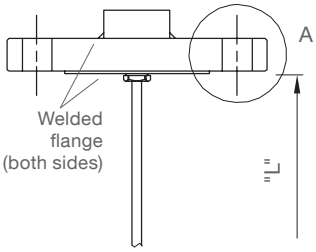

Dimensions

Remote version
(pos.12 a,b)

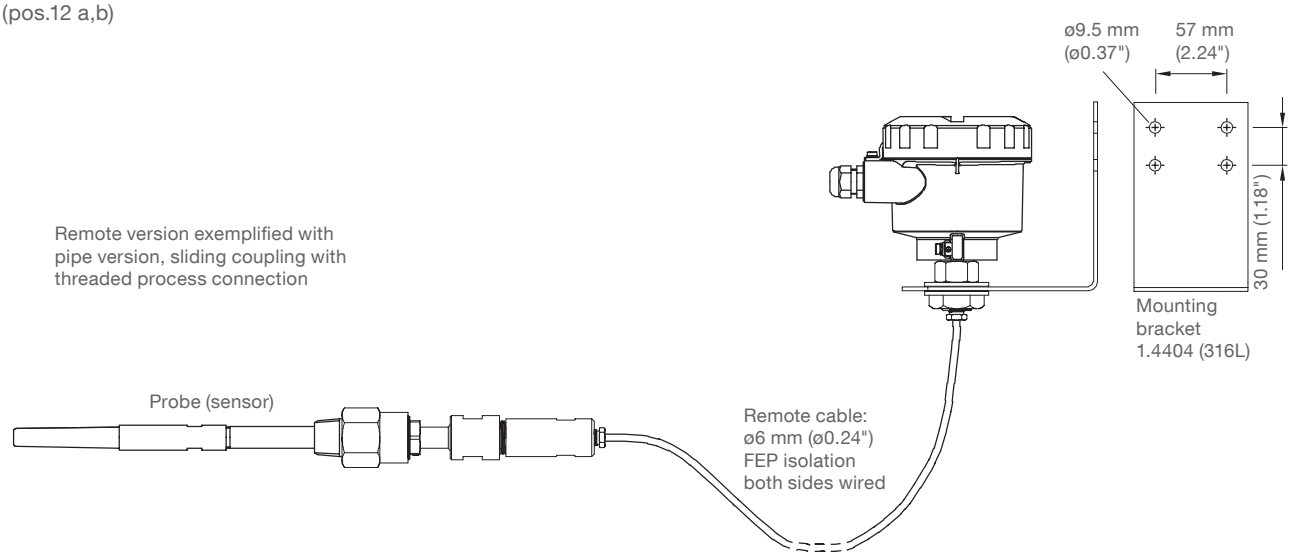

Flanges

	Code	Type	Number of holes	d2 mm (inch)	Lk mm (inch)	D mm (inch)	T thickness mm (inch)
ASME B16.5, raised face	5A	1" 150 lbs	4	15.9 (0.63)	79.3 (3.12)	108.0 (4.25)	14.3 (0.56)
	5B	1" 300 lbs	4	19.1 (0.75)	88.9 (3.5)	123.8 (4.87)	17.5 (0.69)
	5C	1" 600 lbs	4	19.1 (0.75)	88.9 (3.5)	123.8 (4.87)	17.5 (0.69)
	5D	1½" 150 lbs	4	15.9 (0.63)	98.6 (3.88)	127.0 (5.0)	17.5 (0.69)
	5E	1½" 300 lbs	4	22.2 (0.87)	114.3 (4.5)	155.6 (6.13)	20.6 (0.81)
	5F	1½" 600 lbs	4	22.2 (0.87)	114.3 (4.5)	155.6 (6.13)	22.4 (0.88)
	5G	2" 150 lbs	4	19.1 (0.75)	120.7 (4.75)	152.4 (6.01)	19.1 (0.75)
	5H	2" 300 lbs	8	19.1 (0.75)	127.0 (5.0)	165.1 (6.5)	22.2 (0.87)
	5J	2" 600 lbs	8	19.1 (0.75)	127.0 (5.0)	165.1 (6.5)	25.4 (1.0)
	5K	3" 150 lbs	4	19.1 (0.75)	152.4 (6.01)	190.5 (7.5)	23.9 (0.94)
	5L	3" 300 lbs	8	22.2 (0.87)	168.2 (6.62)	209.6 (8.25)	28.6 (1.13)
	5M	3" 600 lbs	8	22.2 (0.87)	168.2 (6.62)	209.6 (8.25)	31.7 (1.25)
	5N	4" 150 lbs	8	19.1 (0.75)	190.5 (7.5)	228.6 (9.0)	23.9 (0.94)
	5P	4" 300 lbs	8	22.2 (0.87)	200.0 (7.87)	254.0 (10.0)	31.7 (1.25)
	5Q	4" 600 lbs	8	25.4 (1.0)	215.9 (8.5)	273.1 (10.75)	38.1 (1.5)
EN 1092-1 type A, flat faced	6A	DN25 PN16	4	14.0 (0.55)	85.0 (3.35)	115.0 (4.53)	18.0 (0.71)
	6B	DN25 PN40	4	14.0 (0.55)	85.0 (3.35)	115.0 (4.53)	18.0 (0.71)
	6C	DN40 PN16	4	18.0 (0.71)	110.0 (4.33)	150.0 (5.91)	18.0 (0.71)
	6D	DN40 PN40	4	18.0 (0.71)	110.0 (4.33)	150.0 (5.91)	18.0 (0.71)
	6E	DN50 PN16	4	18.0 (0.71)	125.0 (4.92)	165.0 (6.5)	18.0 (0.71)
	6F	DN50 PN40	4	18.0 (0.71)	125.0 (4.92)	165.0 (6.5)	20.0 (0.79)
	6G	DN80 PN16	8	18.0 (0.71)	160.0 (6.3)	200.0 (7.87)	20.0 (0.79)
	6H	DN80 PN40	8	18.0 (0.71)	160.0 (6.3)	200.0 (7.87)	24.0 (0.94)
	6J	DN100 PN16	8	18.0 (0.71)	180.0 (7.09)	220.0 (8.66)	20.0 (0.79)
	6K	DN100 PN40	8	22.0 (0.87)	190.0 (7.48)	235.0 (9.25)	24.0 (0.94)

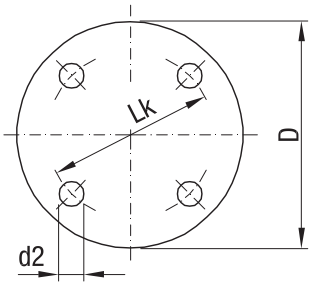

Raised face

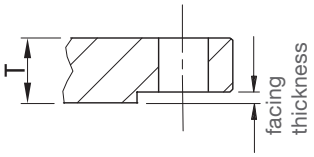

Type	Facing thickness
ASME 150 lbs ASME 300 lbs	2 mm (0.08")
ASME 600 lbs	7 mm (0.28")

Detailed Ex-markings

Code		Certificate		Protection method
Pos.2 G		ATEX II 3G	Ex ic nA IIC T⚠ Gc	Type of protection n
Pos.2 T		ATEX II 1/2G ATEX II 1/2D	Ex ia/db [ia Ga] IIC T⚠ Ga/Gb Ex ia/tb [ia Da] IIIC T⚠ Da/Db	Flameproof, Dust Ignition Proof
Pos.2 Y		ATEX II 1G ATEX II 1/2D	Ex ia IIC T⚠ Ga Ex ia IIIC T⚠ Da/Db	Intrinsically Safe
Pos.2 W		ATEX II 1/2D	Ex ia/tb [ia Da] IIIC T⚠ Da/Db	Dust Ignition Proof
Pos.2 H		FM/ CSA	NI Class I, Div.2, Gr. A, B, C, D Class II, Div.2, Gr. F, G Class III T4 oder T6	Non incendive
Pos.2 U		FM/ CSA	XP-IS Class I, Div.1, Gr. A, B, C, D DIP-IS Class II, Div.1, Gr. E, F, G DIP-IS Class III T4	Explosion Proof, Dust Ignition Proof
Pos.2 P		FM/ CSA	IS Class I, Div.1, Gr. A, B, C, D IS Class II, Div.1, Gr. E, F, G IS Class III T4	Intrinsically Safe
Pos.2 N		FM/ CSA	DIP-IS Class II, Div.1, Gr. E, F, G DIP-IS Class III T4	Dust Ignition Proof
Pos.2 6	+Pos.20 a	INMETRO	Ex ec ic IIC T6…T4 Gc	Type of protection ec
Pos.2 5	+Pos.20 a	INMETRO	Ex ia/db [ia Ga] IIC T6…T3 Ga/Gb Ex ia/tb [ia Da] IIIC T* Da/Db	Flameproof, Dust Ignition Proof
Pos.2 3	+Pos.20 a	INMETRO	Ex ia IIC T6…T3 Ga Ex ia IIIC T* Da/Db	Intrinsically Safe
Pos.2 2	+Pos.20 a	INMETRO	Ex ia/tb [ia Da] IIIC T* Da/Db	Dust Ignition Proof
Pos.2 6	+Pos.20 c	CCC	Ex ec ic IIC TX Gc	Type of protection ec
Pos.2 5	+Pos.20 c	CCC	Ex ia/db [ia Ga] IIC TX Ga/Gb Ex ia/tb [ia Da] IIIC TX Da/Db	Flameproof, Dust Ignition Proof
Pos.2 3	+Pos.20 c	CCC	Ex ia IIC TX Ga Ex ia IIIC TX Da/Db	Intrinsically Safe
Pos.2 2	+Pos.20 c	CCC	Ex ia/tb [ia Da] IIIC TX Da/Db	Dust Ignition Proof

Detailed Ex-markings

Deviation in Ex-markings with Remote version (pos.12 a,b)

Code	Certificate electronic housing		Certificate probe (sensor)		Protection method
Pos.2 G	ATEX II 3G	Ex ic nA IIC T⚠ Gc	ATEX II 3G	Ex ic IIC T⚠ Gc	Type of protection n
Pos.2 T	ATEX II 2(1)G ATEX II 2(1)D	Ex db ia [ia Ga] IIC T⚠ Gb Ex ia tb [ia Da] IIIC T⚠ Db	ATEX II 1G ATEX II 1D ATEX II 1/2D	Ex ia IIC T⚠ Ga Ex ia IIIC T⚠ Da Ex ia IIIC T⚠ Da/Db	Flameproof, Dust Ignition Proof
Pos.2 Y	ATEX II 1G ATEX II 2D	Ex ia IIC T⚠ Ga Ex ia IIIC T⚠ Db	ATEX II 1G ATEX II 1D ATEX II 1/2D	Ex ia IIC T⚠ Ga Ex ia IIIC T⚠ Da Ex ia IIIC T⚠ Da/Db	Intrinsically Safe
Pos.2 W	ATEX II 2(1)D	Ex ia tb [ia Da] IIIC T⚠ Db	ATEX II 1D ATEX II 1/2D	Ex ia IIIC T⚠ Da Ex ia IIIC T⚠ Da/Db	Dust Ignition Proof
Pos.2 6 +Pos.20 a	INMETRO	Ex ec ic IIC T6/T4 Gc	INMETRO	Ex ic IIC T6…T4 Gc	Type of protection ec
Pos.2 5 +Pos.20 a	INMETRO	Ex db ia [ia Ga] IIC T6…T5 Ga/Gb Ex ia tb [ia Da] IIIC T55°C…T90°C Da/Db	INMETRO	Ex ia IIC T6…T3 Ga Ex ia IIIC T* Da Ex ia IIIC T* Da/Db	Flameproof, Dust Ignition Proof
Pos.2 3 +Pos.20 a	INMETRO	Ex ia IIC T6/T4 Ga Ex ia IIIC T55°C/T70°C Da/Db	INMETRO	Ex ia IIC T6…T3 Ga Ex ia IIIC T* Da Ex ia IIIC T* Da/Db	Intrinsically Safe
Pos.2 2 +Pos.20 a	INMETRO	Ex ia tb [ia Da] IIIC T55°C…T90°C Da/Db	INMETRO	Ex ia IIIC T* Da Ex ia IIIC T* Da/Db	Dust Ignition Proof
Pos.2 6 +Pos.20 c	CCC	Ex ec ic IIC TX Gc	CCC	Ex ic IIC TX Gc	Type of protection ec
Pos.2 5 +Pos.20 c	CCC	Ex db ia [ia Ga] IIC TX Ga/Gb Ex ia tb [ia Da] IIIC TX Da/Db	CCC	Ex ia IIC TX Ga Ex ia IIIC TX Da Ex ia IIIC TX Da/Db	Flameproof, Dust Ignition Proof
Pos.2 3 +Pos.20 c	CCC	Ex ia IIC TX Ga Ex ia IIIC TX Da/Db	CCC	Ex ia IIC TX Ga Ex ia IIIC TX Da Ex ia IIIC TX Da/Db	Intrinsically Safe
Pos.2 2 +Pos.20 c	CCC	Ex ia tb [ia Da] IIIC TX Da/Db	CCC	Ex ia IIIC TX Da Ex ia IIIC TX Da/Db	Dust Ignition Proof

Electrical installation

Standard

Relay SPDT/
Solid state switch

Power supply:

12 .. 250 V AC/ DC (0 .. 60 Hz)
2 W max.

Signal output:

Relay:
Floating relay SPDT
AC max. 250 V, 8 A, 2000 VA, non inductive
DC max. 30 V, 5 A, 150 W, non inductive

Solid state switch:
30 V DC or 30 V AC (peak), 82 mA
Observe protection (see below)

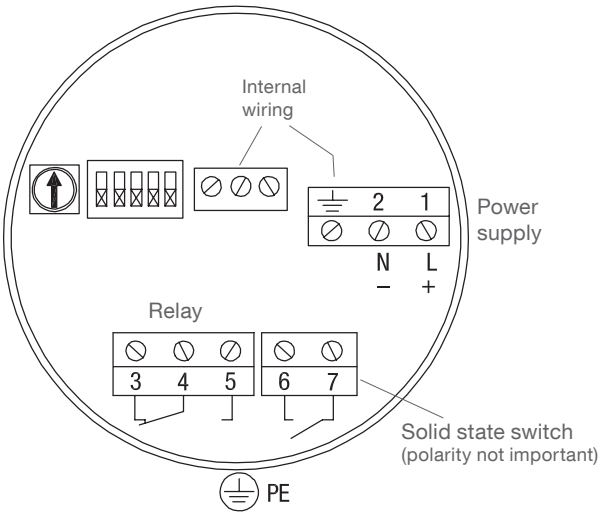

Digital

Profibus PA/
Solid state switch

Power supply:

12 .. 30 V DC, 12.5 mA

Intrinsically Safe:
12 .. 24 V DC, 12.5 mA
Intrinsically safe barrier required
For ATEX, INMETRO, CCC:
U_i=24 V, I_i=380 mA, P_i=5.32 W, C_i=5 nF, L_i=10 uH
For FM/ CSA:
See "Connection drawing" in the Instruction Manual

Signal output:

Solid state switch:
30 V DC or 30 V AC (peak), 82 mA
Observe protection (see below)

Intrinsically safe:
Intrinsically safe barrier required
For ATEX, INMETRO, CCC:
U_i=30 V, I_i=200 mA, P_i=350 mW, C_i=0, L_i=0
For FM/ CSA:
See "Connection drawing" in the Instruction Manual

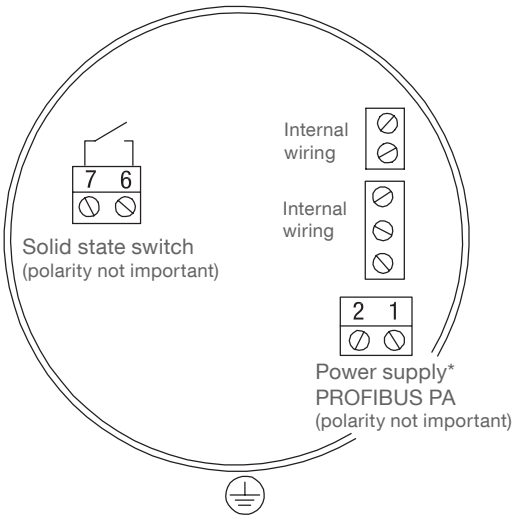

* With use of Profibus the wiring must be according to Profibus PA standards.
If Profibus is not used, a shielded cable is recommended to ensure stable measurement.

Protection of Solid State Switch
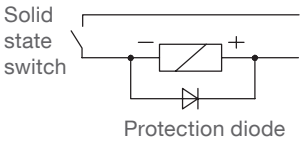
Observe a protection diode in case of connecting an external relay to the Solid state switch